USED ON
–

DWG NO. C-100305

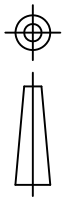

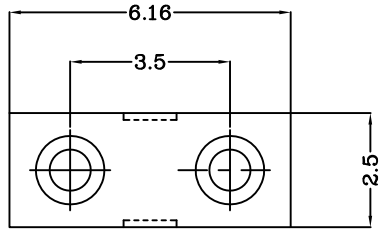

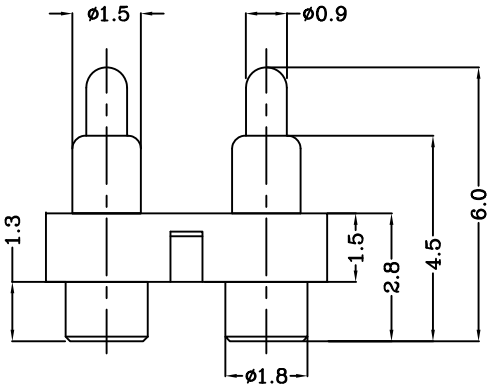

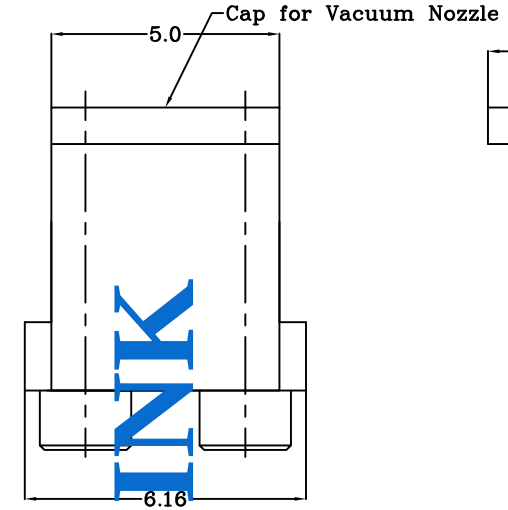

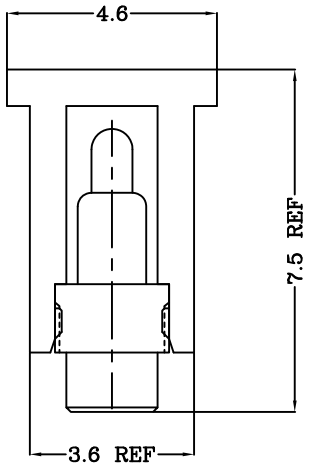

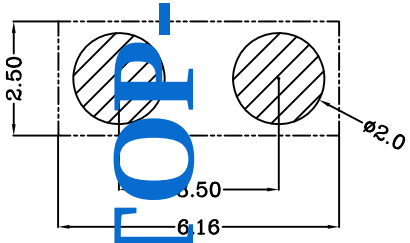

Recommended PCB Layout

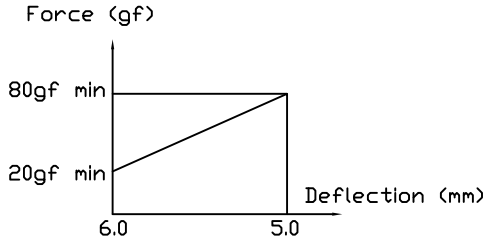

Notes:
1 Material, Housing: PA 4.6 (30% Glass Filled)
Color Black.
Contact: Brass
2 Mechanical demands:
Plating Plunger: plating Au over plating Ni
Plating Body: plating Au over plating Ni.

	NEW		08'/03/27
LTR	REVISION RECORD	APVD	DATE

DIMENSIONS IN MM
TOLERANCES UNLESS OTHER SPECIFIED
0 = ±–
0.0 = ±0.15
0.00 = ±0.10
0.000 = ±–
ANGLE: ±1°
SURF TEXTURE: 3.2
REMOVE BURRS. BREAK SHARP EDGES R0.05 MAX
DO NOT SCALE PRINT

MATL 1	HT TR —		FIN —
DWN Qin	APVD Lansing	top-link Electronics	Top-Link Electronics Ltd.
CHK Andy	REL		
NAME POGO PIN CONNECTOR PGC-1.5-6.0-R-2P-3.5PH			
SCALE 1:1	A4	DWG NO. C-100305	SHEET 1 OF 1	REV A

100305-2
PART NUMBER

LOC –
DIST –

THIS INFORMATION IS CONFIDENTIAL AND IS DISCLOSED TO YOU ON CONDITION THAT NO FURTHER DISCLOSURE IS MADE BY YOU TO OTHER THAN TOP-LINK PERSONNEL WITHOUT WRITTEN AUTHORIZATION FROM TOP-LINK LTD.

TOP-LINK

D C B A

4 3 2 1