DWN No.: C-100594

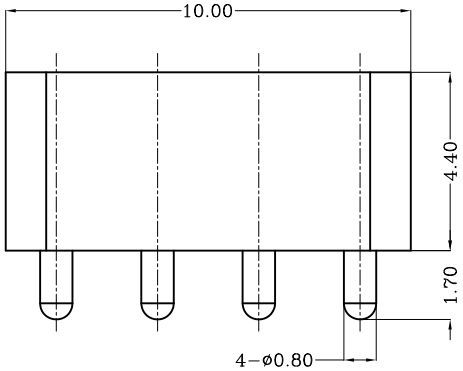

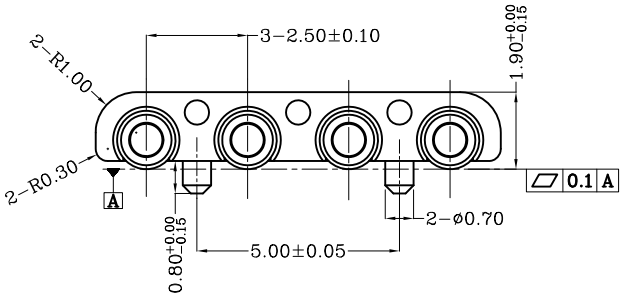

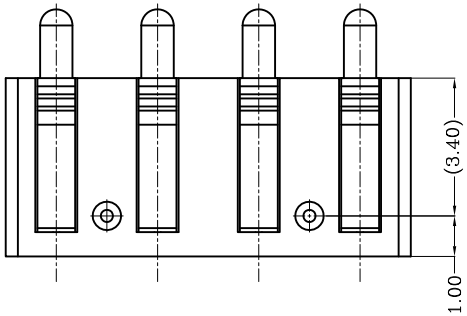

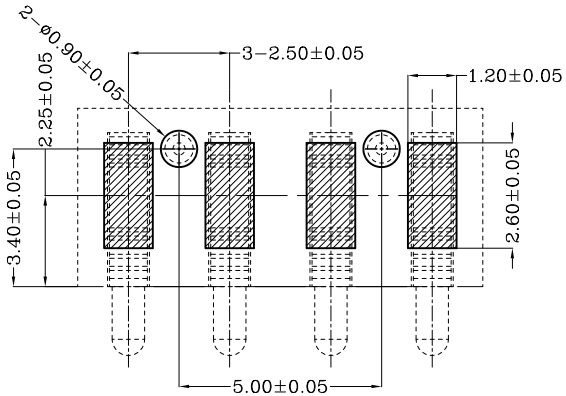

Recommended PCB Layout

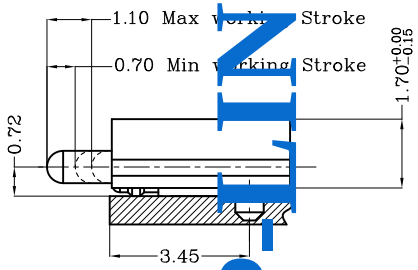

Item	Part name	Q'ty/Ea'	Material	Finish
1	HSG	1	High temp.Plastic UL94 V-0 Color Black	———
2	Body	4	Leaded Brass	Au plating 0.1um min Ni plating 1.4um min
3	Plunger	4	Leaded Brass	Au plating 0.4um min Ni plating 1.4um min
4	Spring	4	Stainless steel wire	———
5				

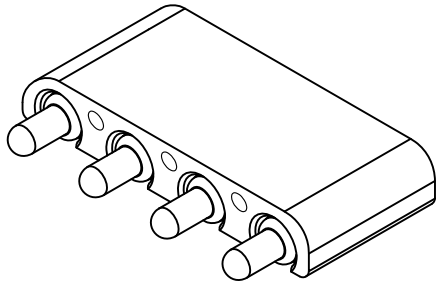

Table 2 Mechanical performance		
The Min.working Stroke	0.7mm	Min 100gf <2.1>
The Max.working Stroke	1.10mm	160±35gf
Durability	10000 cycle	

Notes:
1 Dimensions shall be interpreted per ASME Y14.5M-1994.
2 Mechanical performance(See the table 2)
<2.1>The force is the average of forces obtained when plunger goes downwards and upwards.
<2.2>Warning: Working height are not permitted to be less than Min working height.
3 Electrical performance
Resistance: 30mOhm Max.; Current: 2A DC
4 Packaging Spec.
5 RoHS compliant.

TOP-LINK

THIS INFORMATION IS CONFIDENTIAL AND IS DISCLOSED TO YOU ON CONDITION THAT NO FURTHER DISCLOSURE IS MADE BY YOU TO OTHER THAN TOP-LINK PERSONNEL WITHOUT WRITTEN AUTHORIZATION FROM TOP-LINK LTD.

DIST ---
DIST ---

Rev.	Revision record.	Date.
C	Renewal	2017/10/11
B1	Renewal	2016/07/25
B	Renewal	2011/12/28
A	NEW	2010/03/22

Top-Link Electronics Ltd.
TOLERANCES UNLESS OTHER SPECIFIED
0 = –
0.0 = ±0.15
0.00 = ±0.10
0.000= –
Angle: ±1°
SURF TEXTURE: REMOVE BURRS. BREAK SHARP EDGES R0.05 MAX.DO NOT SCALE PRINT.

Type: Customer drawing	Unit: mm		Weight
DWN: Caiwanlu	APVD:	top-Link Electronics	Top-Link Electronics Ltd.
CHK:	REL:		
Name: Customer drawing			
Scale: 1:1	Size: A4	DWG No.: C-100594	Page: 1/1	Rev.: C

100594-4
PART NUMBER